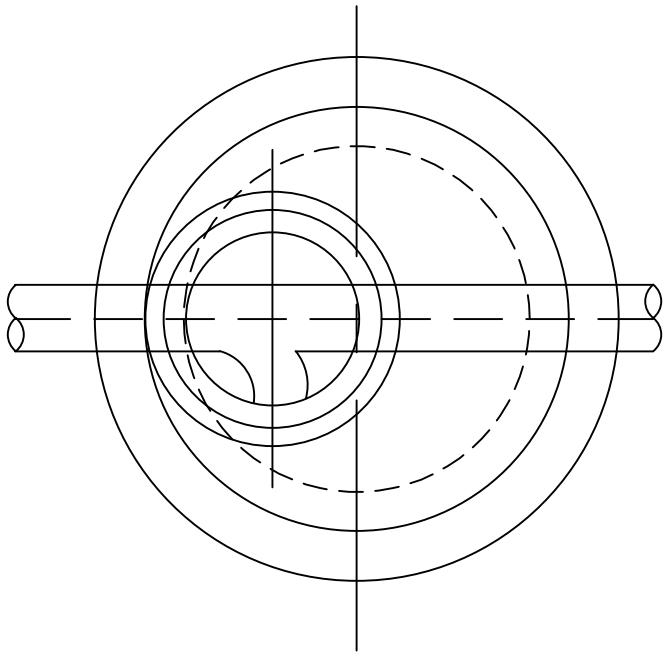

TOP PLAN VIEW

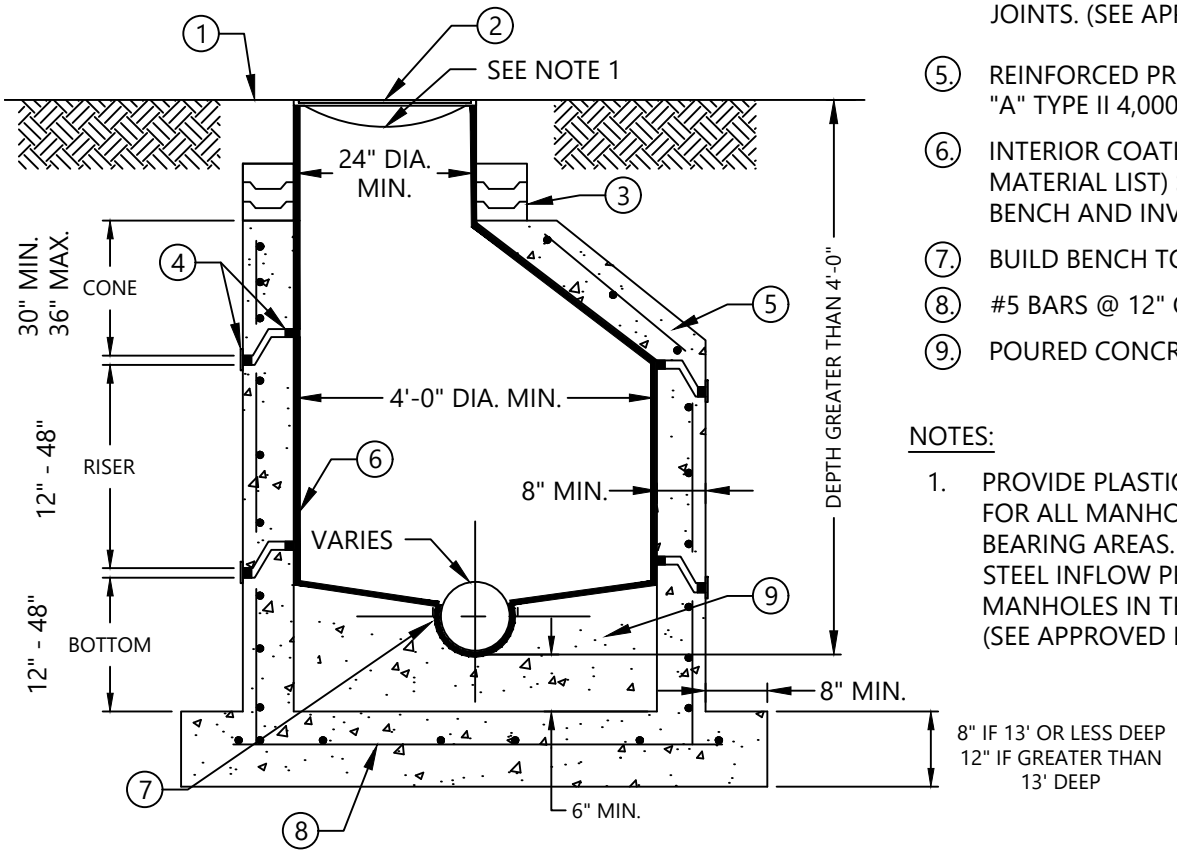

SECTION VIEW

1. FINISHED GRADE
2. MANHOLE RING & COVER (SEE DETAILS S-03, S-04 & S-05 AND APPROVED MATERIALS LIST
3. 4" MIN., PRECAST CONCRETE ADJUSTING RINGS. TOTAL HEIGHT OF CHIMNEY NOT TO EXCEED 12" UNLESS OTHERWISE APPROVED BY LCU
4. ALL JOINTS SHALL BE SEALED ON INTERIOR & EXTERIOR WITH A FLEXIBLE PREFORMED BITUMASTIC JOINT MATERIAL. WRAP TAPE AROUND OUTSIDE OF MANHOLE AT ALL JOINTS. (SEE APPROVED MATERIAL LIST)
5. REINFORCED PRECAST CONCRETE CLASS "A" TYPE II 4,000 PSI
6. INTERIOR COATING/LINER (SEE APPROVED MATERIAL LIST) SYSTEM TO COVER ENTIRE BENCH AND INVERT CHANNEL
7. BUILD BENCH TO SPRING LINE OR ABOVE
8. #5 BARS @ 12" O.C. E.W. TYPICAL
9. POURED CONCRETE. NO BRICK OR GRAVEL

NOTES:

1. PROVIDE PLASTIC INFLOW PROTECTORS FOR ALL MANHOLES IN NON-TRAFFIC BEARING AREAS. PROVIDE 304 STAINLESS STEEL INFLOW PROTECTORS FOR ALL MANHOLES IN TRAFFIC BEARING AREAS. (SEE APPROVED MATERIAL LIST)

NOT TO SCALE

LEE COUNTY UTILITIES ENGINEERING
1500 MONROE STREET
FORT MYERS, FLORIDA 33901

TITLE: PRECAST MANHOLE ECCENTRIC

REVISION: 12/18/24

DETAIL NO: S-08.dwg